(2001)

MINIMUM REQUIREMENTS FOR CONCRETE ENCASED CONDUIT (FOUR CONDUITS)

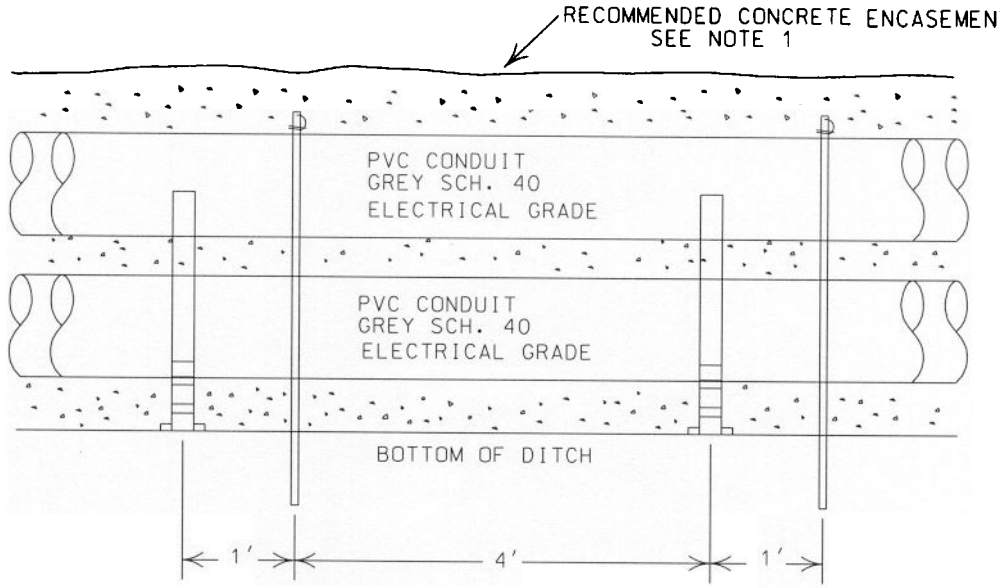

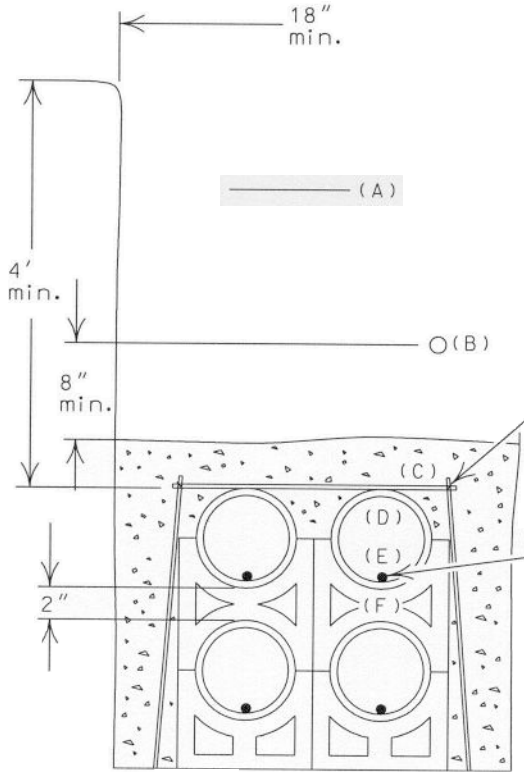

WARNING TAPE MINIMUM 12" BELOW FINAL GRADE

LOCATION OF FOREIGN CABLES IF SHARING TRENCH

1/2" STEEL TIE RODS TO PREVENT FLOATING OF CONDUIT. TIE TOP ROD TO SIDE RODS WITH STEEL WIRE.

(D) PVC CONDUIT GREY SCHEDULE 40 APROVED FOR ELECTRICAL USE. (SIZED BY MVEC)

(E) NYLON PULL STRING, INSTALLED BY CONSUMER, IN ALL CONDUITS.

(F) PLASTIC CONDUIT SPACER CLAMPS

NOTES:

1. CONCRETE TO BE 1:3:6 MIX WITH NO AGGREGATE LARGER THAN 3/4". 3" MINIMUM COVER REQUIRED AROUND ALL CONDUITS.
2. MVEC REPRESENTATIVE TO INSPECT AND APPROVE CONDUIT INSTALLATION PRIOR TO CONCRETE ENCASEMENT.